Parts List			
ITEM	QTY	PART No.	DESCRIPTION
1	1	BC0610	Plug with O-rings for Test Port M6
2	1	BB5822	Plug for Nitrogen Purge and Saftey Valve V2.
3	1	BB4838	Adaptor Assy Gisma Serie 40 V2
4	1	BB4829	Adaptor Assy Gisma Serie 10 Size 5 V2
5	1	BB4536	Junction Box Mech Assy V2
6	1	103103	Gisma Flange Receptacle S10 Size 5 w 4 pin Contacts Ø5
7	1	103074	Gisma Flange Receptacle S40 Size4 w8xFiber Optical Contact wPigtails

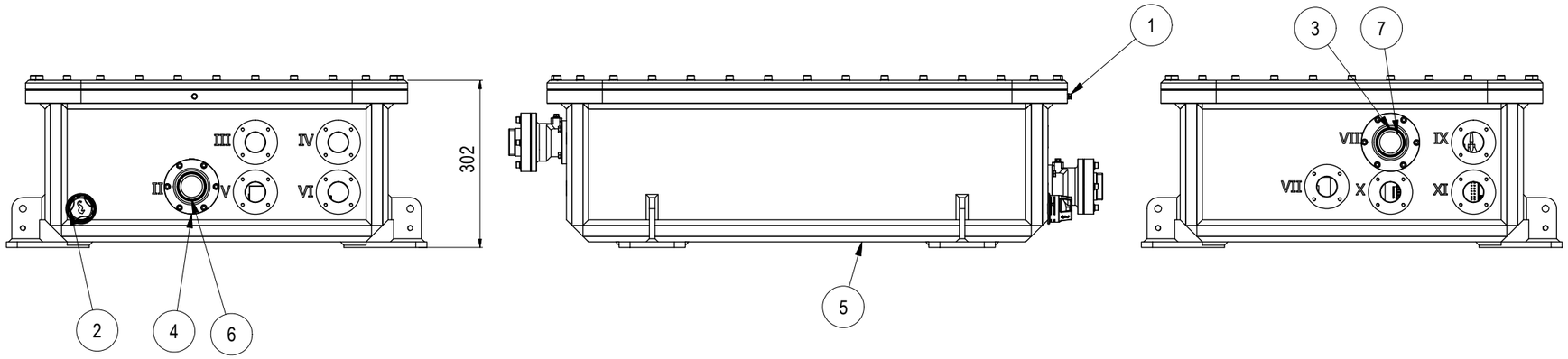

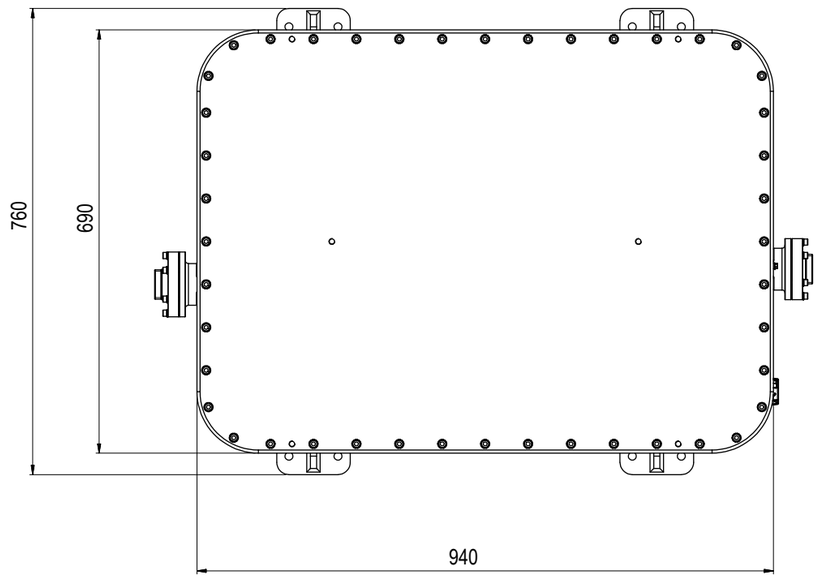

NOTE: 1
DESIGN CODE:
N/A

NOTE: 2
TECHNICAL CLASSIFICATION:

Article Type:	017-AUV Infrastructure
Main Group:	17.01. UID Charge Station
Intermediate Group:	17.80.04. Junction Box
Sub Group:	17.80.385.01. <690 VAC 7.2kW Input

NOTE: 3
INTERFACE INFORMATION:

Pressure Rating Bar:	N/A
Design Water Depth:	N/A
Material:	N/A
Weight:	509,9 kg
Volume:	81,66 dm^3
Submerged Weight:	426,22 kg
Surface Area:	118392 cm^2
Hydraulic:	N/A
Mechanical:	N/A
Electrical:	600/690 VAC
Com. & Protocol:	Ethernet

NOTE: 4
ADDITIONAL INFORMATION:
Atmospheric Junction Box containing electronics for the Blue Logic Subsea Docking Module designed for charging of AUVs and drones. Designed for 500mwater depth with double seals and overpressure safety valve that also serves as interface for Nitrogen purging. Penetrators for communication and power jumpers for interfacing parent subsea control system. Prepared for connecting up to 8 inductive connectors or other electrical equipment.
Constructed in Duplex material and coated according to Norsok M-501 System 7 for permanent subsea service.
Separate A and B power systems. Power capacity 2x3kVA

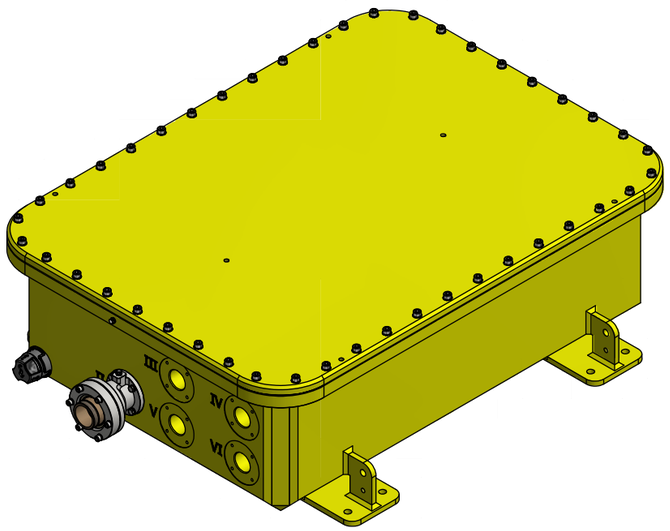

Rev.	Date	Reason for issue	Revision change	Made	Chk'd	Appr.
02	9.4.2021	7-IFC (Issued for Construction)		WTJ	HSE	EKJ
01	24.3.2021	7-IFC (Issued for Construction)		WTJ	RAN	WTJ

BLUE LOGIC

Dwg Scale: NTS
Dwg Proj:
Dwg Format: A3

Drawing title: Junction Box 500m Subsea Docking Stations

Drawing number: BB6359

Rev. 02